SimplControls

Quick Start Guide for
Installation and Wiring

SimplThermostat
SimplMeter
SimplGateway
SimplRelay
SimplSensors

Simpl.

SimplControls

- Install SimplMeter inside the main switchgear. See page 6.
- Plug the SimplGateway into a wall outlet and make sure that its signal strength for SimplMeter and the WiFi/4G signal to the cloud for SimplGateway are satisfactory. See page 9.
- Note that it may take several minutes before SimplGateway obtains its signals and starts communicating to Simpl's servers. Signal strength for various nodes are shown on the user interface only after this happens.
- Install SimplThermostat sensor(s). See page 3.
- Install SimplThermostat inside the RTU's control box and connect to the sensors. See page 4.
- Check all Signal Strengths. See page 9.

SimplThermostat

LoRa WiFi

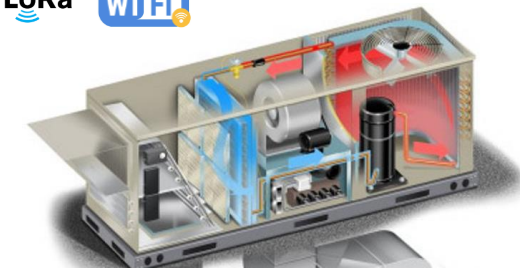

SimplThermostat

LoRa WiFi

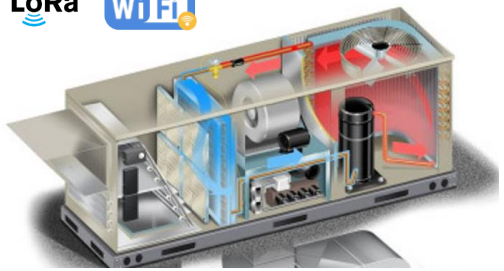

SimplThermostat

LoRa WiFi

WiFi Mesh nodes

WiFi

Private WiFi Mesh provides connectivity between nodes and between nodes and SimplGateway

In case of a weak WiFi signal, plug a SimplExtender to a wall outlet.

LoRa 4G LTE WiFi

WiFi

SimplMeter

- Install inside the main switchgear
- Connect Phase A,B and C wires
- Install three rope CTs around their respective phase
- Measure building power and energy consumption in real-time

SimplGateway

- Plug into the Wall Outlet
- Communicates to all devices and to the cloud

Simpl.

SimplThermostat

Installation Overview

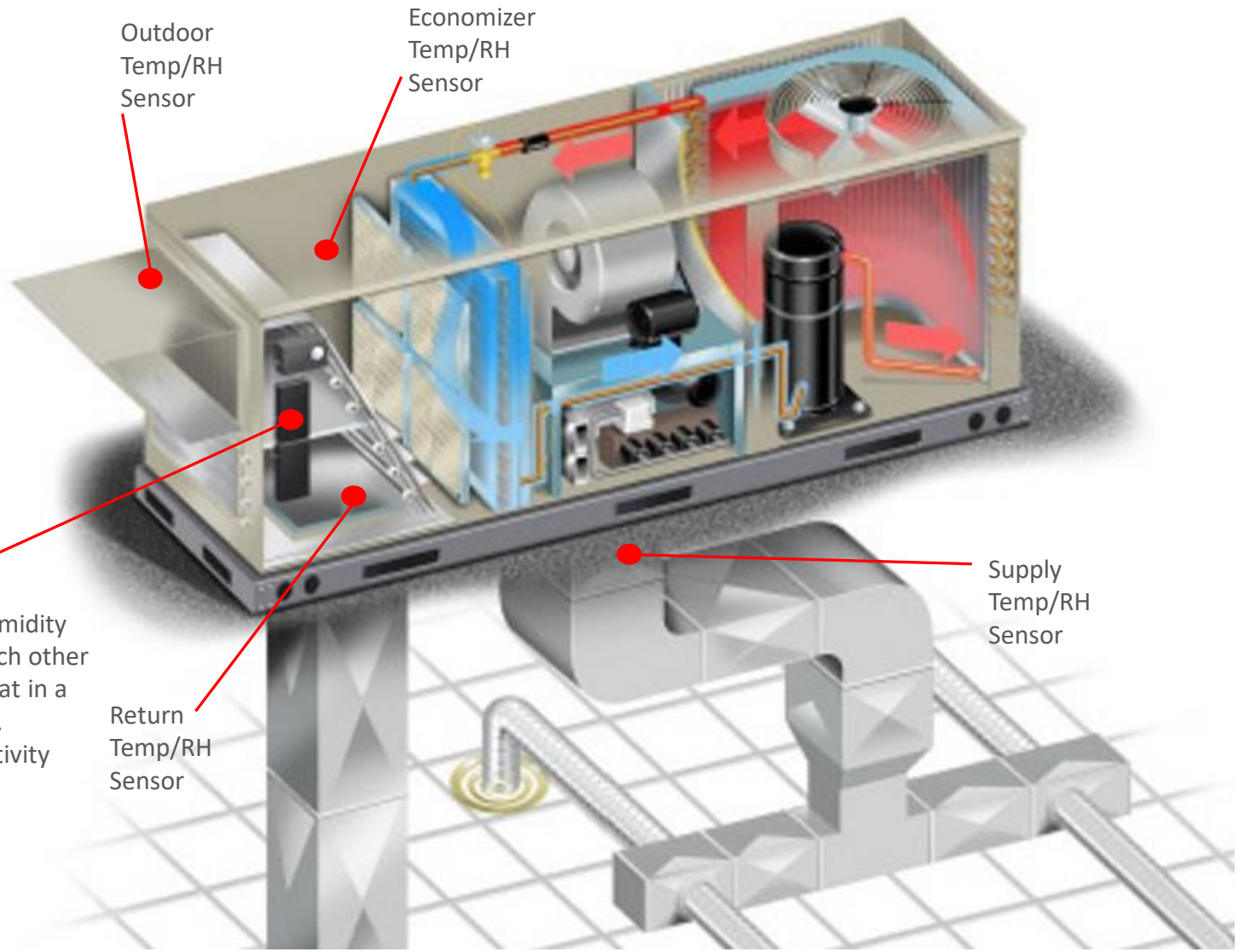

LoRa WiFi

SimplThermostat

- 4 temperature and humidity sensors connect to each other and to SimplThermostat in a daisy-chained manner.
- WiFi and Lora Connectivity
- 24 VAC Power Supply

SimplThermostat

Wiring Diagram

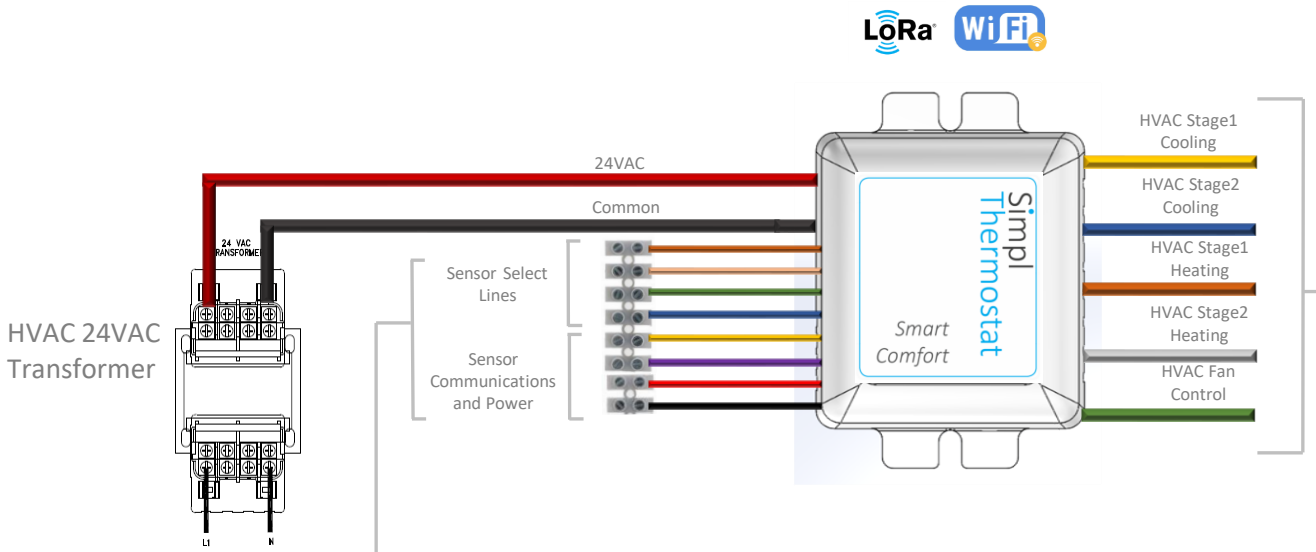

LoRa WiFi

SimplThermostat

4 temperature and humidity sensors connect to each other and to SimplThermostat in a daisy-chained configuration.

Use 24 AWG, solid-core wire for connecting Sensors to each other and to SimplThermostat.
Simpl recommends cat5 ethernet cable which has 8 twisted pair, solid-core wires.

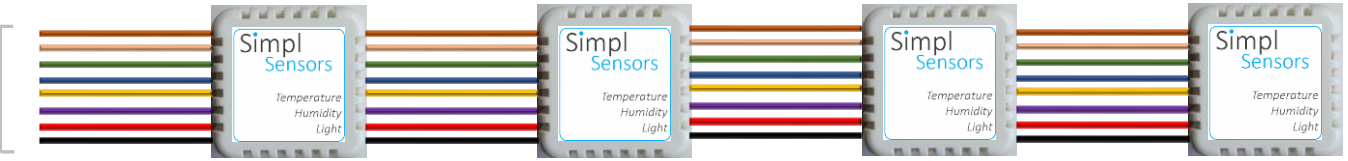

Sensor 1
One sensor is supplied with each SimplThermostat.

Sensors 2 to 4
Up to three additional sensors may be connected to SimplThermostat by daisy-chaining the 8-wire cable.

SimplSensors

Wired Sensor Installation

1. Punch a hole, ½” in diameter in the drywall
2. Plug in the USB power supply into a non-switched outlet in the ceiling above the ceiling tiles.
3. Connect the USB cable to the socket on the USB power supply and make sure that the voltage between the black and red wires on the USB cable is between 4.8 to 5.2 volts.
4. Unplug the USB power supply and keep it unplugged until the final stage of the installation process
5. Use wire nuts to connect the USB cable with additional wire (24 AWG, black and red) to span the distance between the USB power supply and the hole punched in step 1
6. Route the USB cable and additional wire (attached in the previous step) between the USB power supply and the punched hole.
7. Connect the SimplSensors’ black and red wires to the black and red wires routed in the previous step using wire nuts.
8. Plug in the USB power supply.
9. Record SimplSensors’ serial number.
10. Observe on Simpl’s user interface (SimplWeb) that SimplSensors is connected and running.

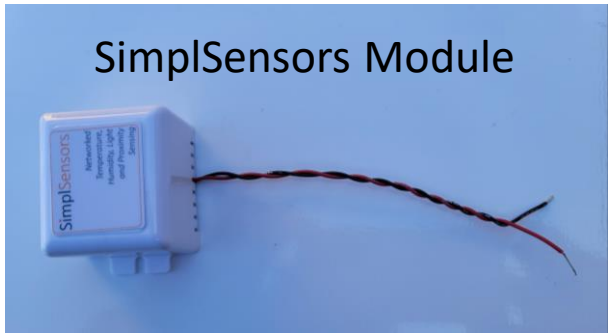

SimplMeter

- SimplMeter has two independent power/ energy meters.
- Meter 1 is typically used for building consumption.
- Meter 2 is typically used for solar energy generation. Leave Meter 2 unconnected if no solar electricity generation facility is installed.
- Residential systems typically use split-phase voltage. In this case, Phase C is not connected and may be left unconnected.

IMPORTANT:

- Be sure to connect the CT that is looped around the Phase A bus bar/cable to the specific location of Phase A.
- Repeat the above for phases B and C.
- In other words, do not interchange CTs from one phase by connecting it to another phase.
- If this is no done correctly, the phase measurements may show negative power flow or very low power factors even when no solar is present.
- Check power factors by turning off the solar system first.

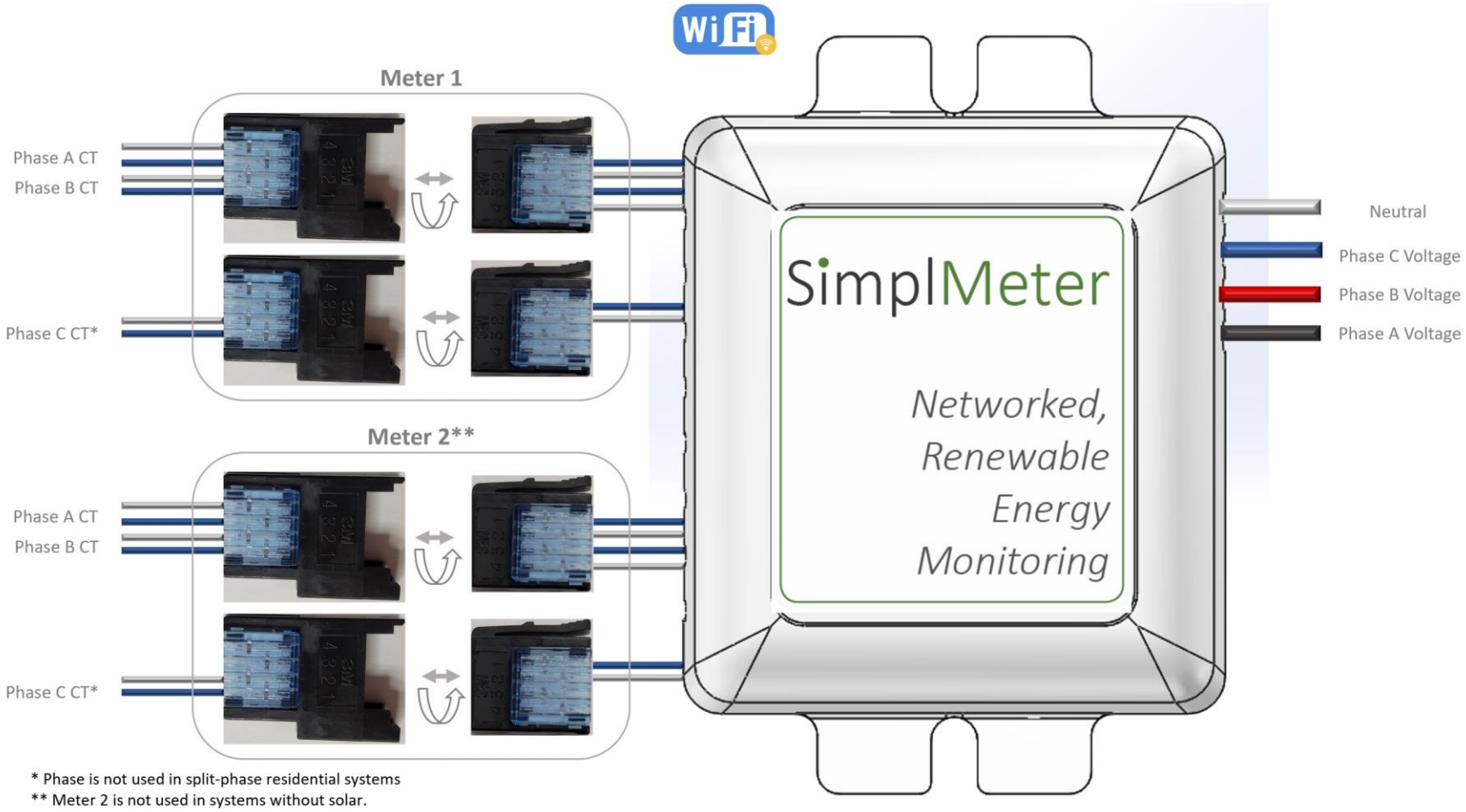

SimplRelay

Wiring Diagram

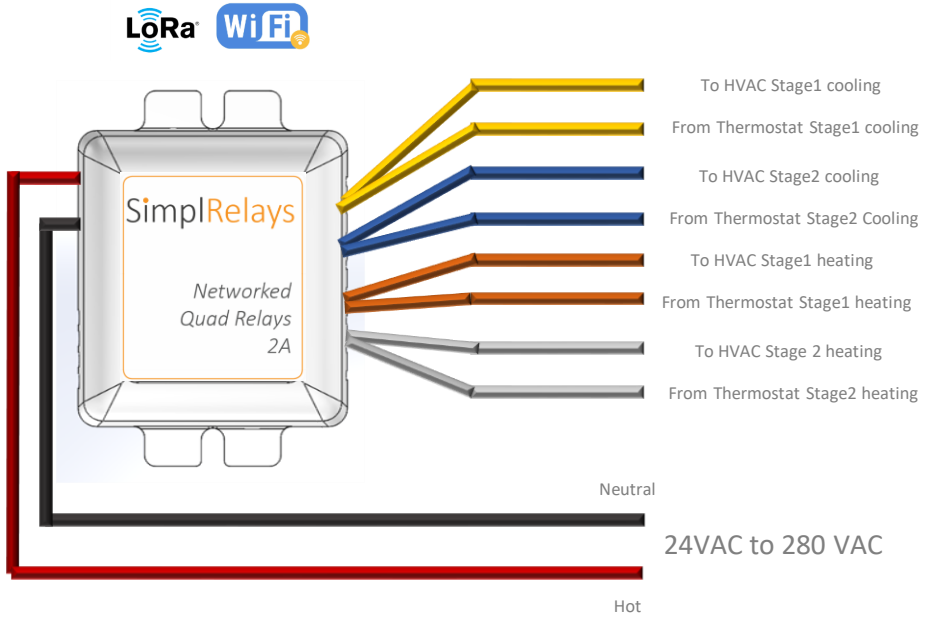

When not controlling an HVAC units these Four dry contacts/relays may be used with any load in the normally closed position

SimplRelay

Lighting and Appliance Controls With Pre-installed Contactors

- Up to 4 loads are controlled by a single SimplRelays 2A
- Required coil current for the pre-installed contactors must be less than 2A.
- Required coil voltage for the pre-installed contactors should be no more than 120V.

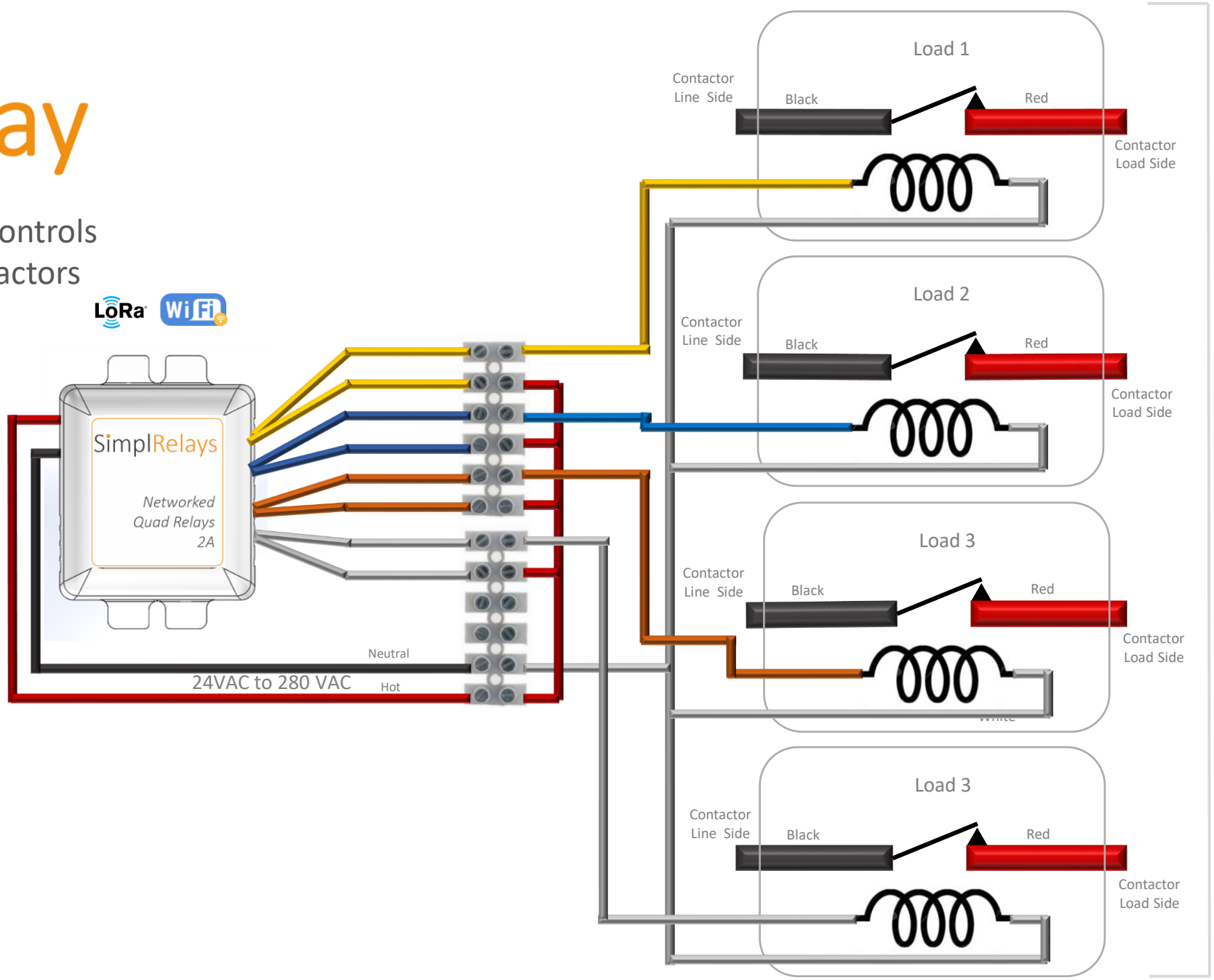

SimplRelay

Lighting and Appliance Controls Without Contactor

- For applications that do not include a pre-existing contactor or relay, we recommend using SimplRelays 30A Single or SimplRelays 30A, Dual for single or dual lighting and appliance controls.
- It is important to make sure that the current draw of the appliance or the lighting circuit is less than 30A per circuit.
- SimplRelays, 30A supports loads up to 250 VAC.
- Note that SimplRelays is powered using the black cable with a red stripe on it. As such the black cable with the red stripe MUST always be connected to the line side of the electrical wiring.

SimplRelays 30A-Dual Channel

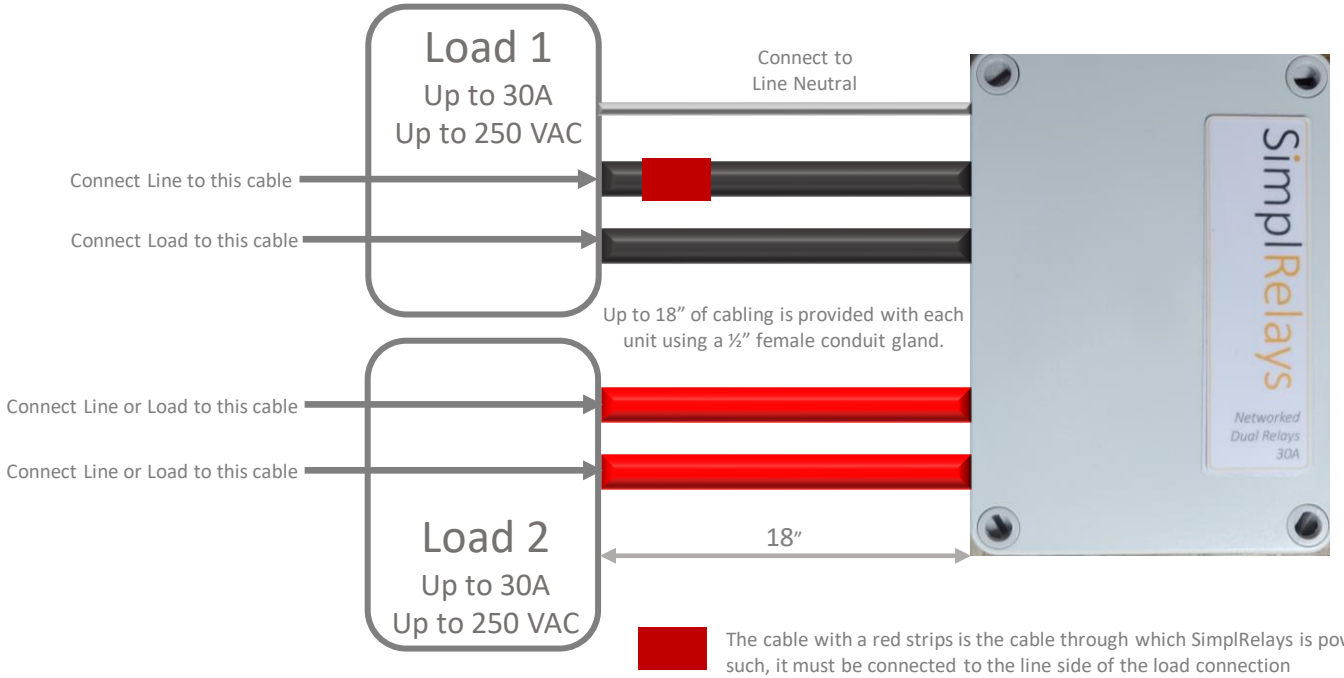

SimplRelays 30A-Single Channel

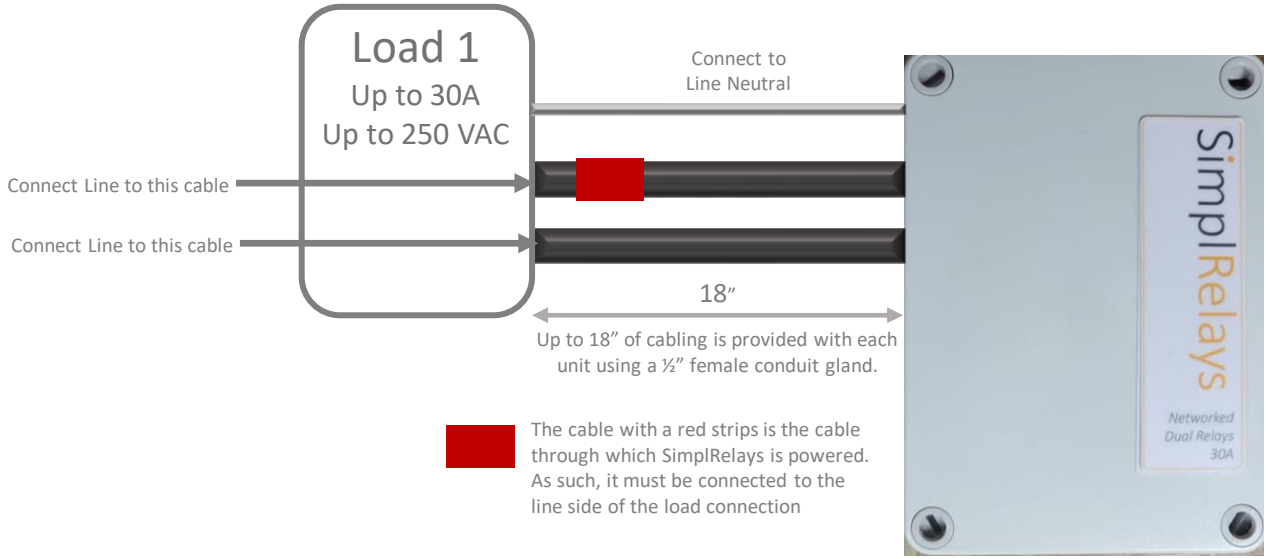

Simpl.

SimplRelays Quick Start Guide

SimplRelays 2A: HVAC Controls

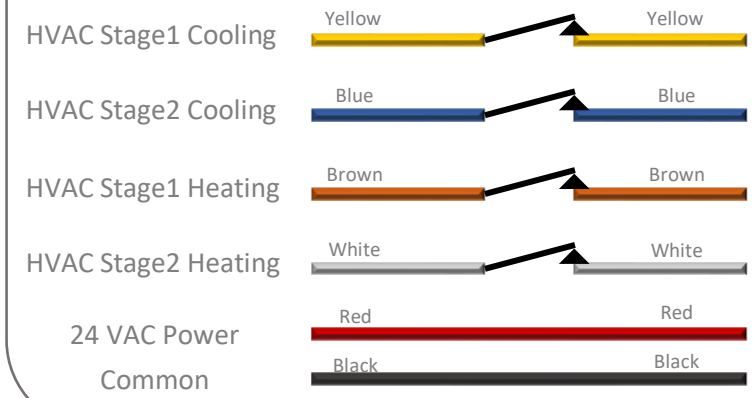

SimplRelays 30A-Dual Channel

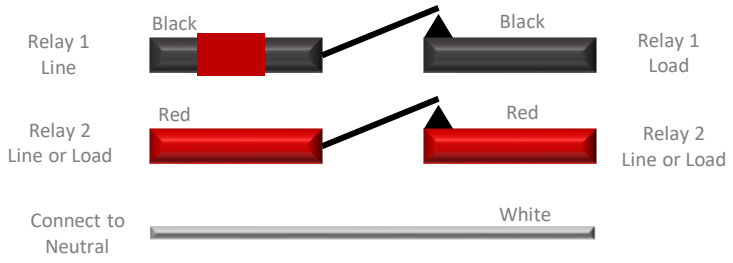

HVAC Controls with Powered Sensor

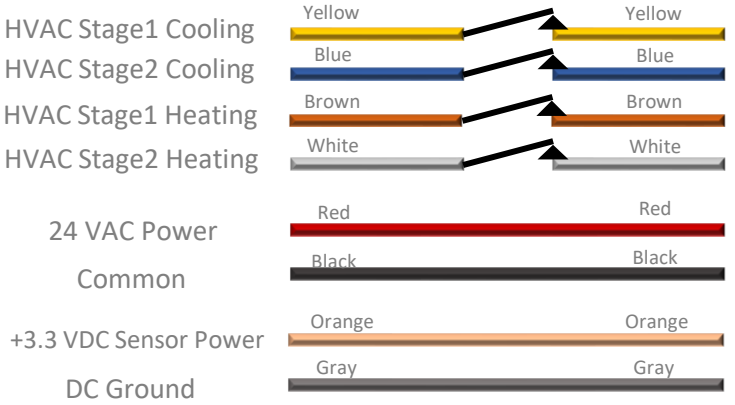

SimplRelays 30A-Single Channel

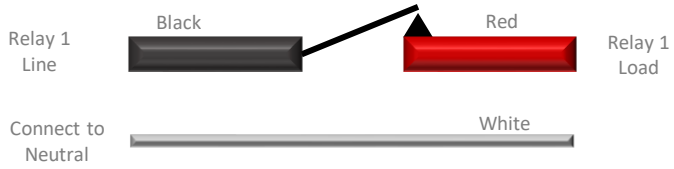

Signal Strength

- Go to www.simplglobal.com
- Click on “Login” on the upper right-hand corner of the website.
- Log into the user interface system with your credentials.
- Select the system that is being installed.
- Press on the “Signals” icon on the lower left-hand side of UI as shown here.
- This will take you to the Signal Strength page showing the signal strength for each of the installed nodes.

❖ Green: Excellent
❖ Yellow: Good
❖ Red: Poor
❖ If a node does not show up, either it is not powered or that it is far removed from the rest of the system.

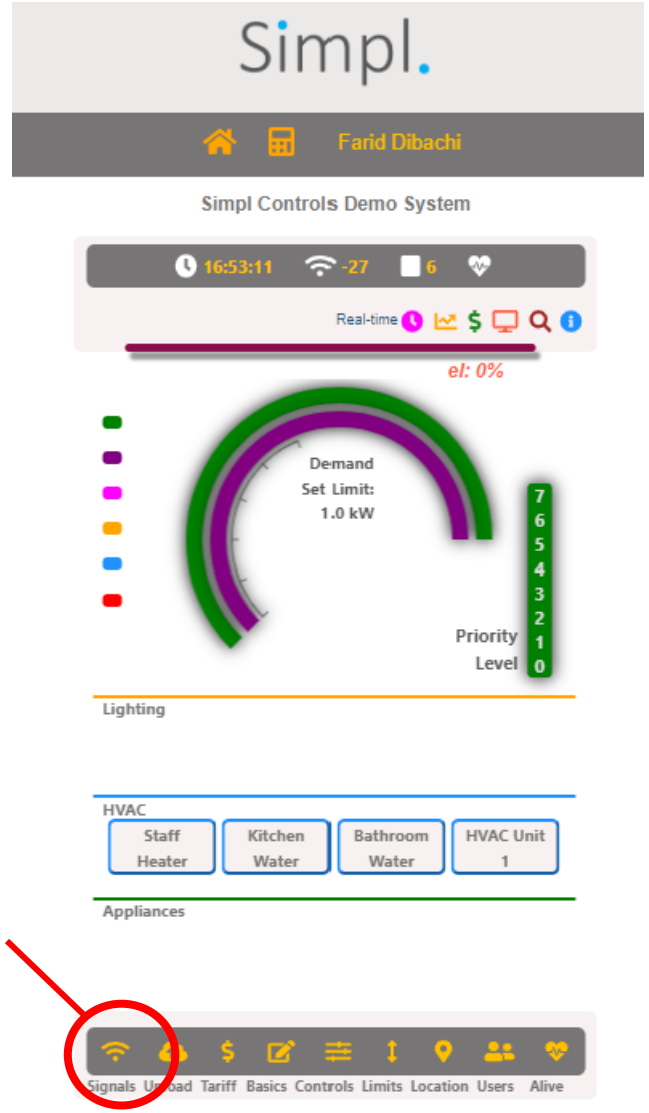

Mechanical Drawing for SimplMeter, SimplThermostat and SimplRelays

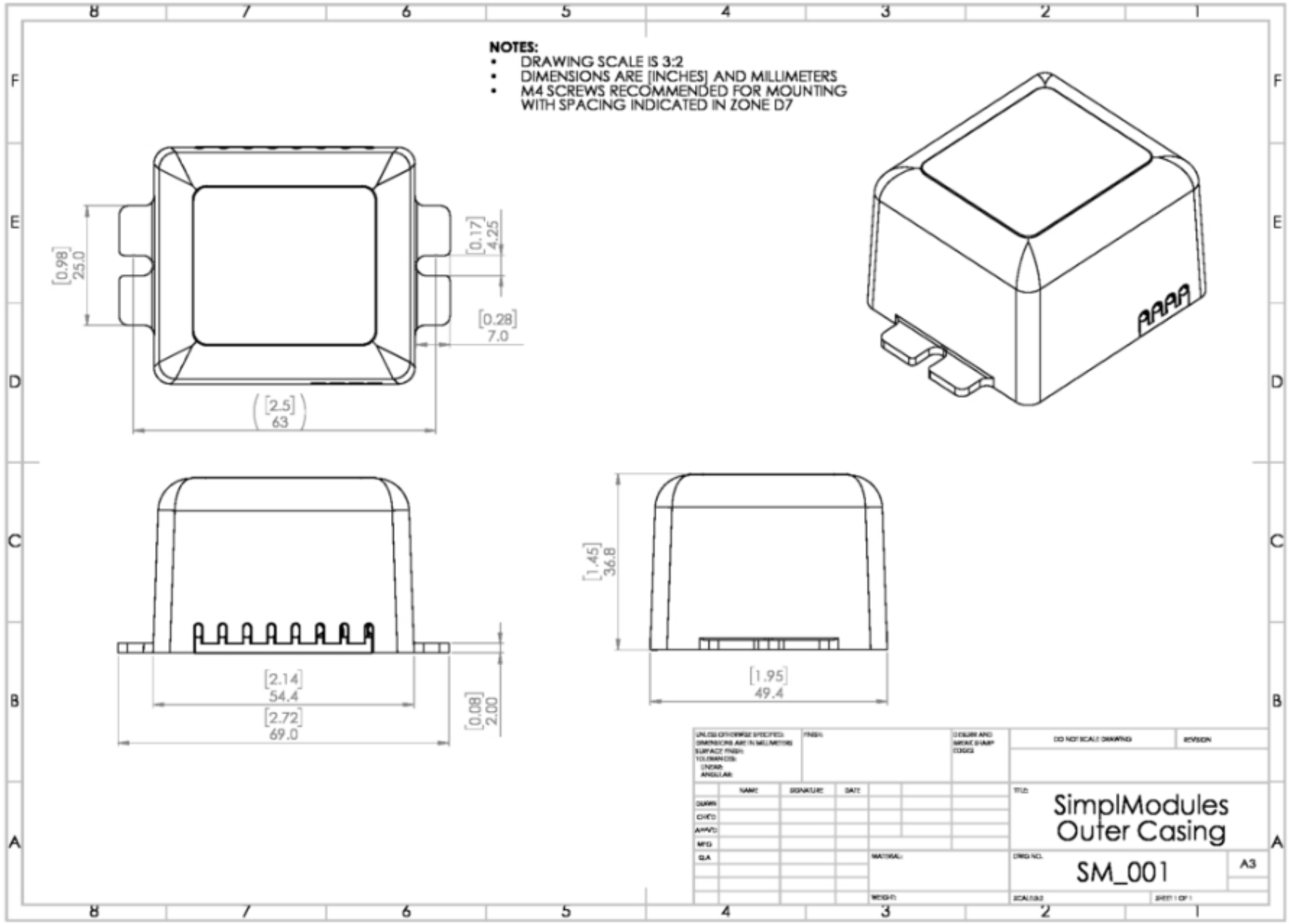

Mechanical Drawing for SimplThermostat Sensors

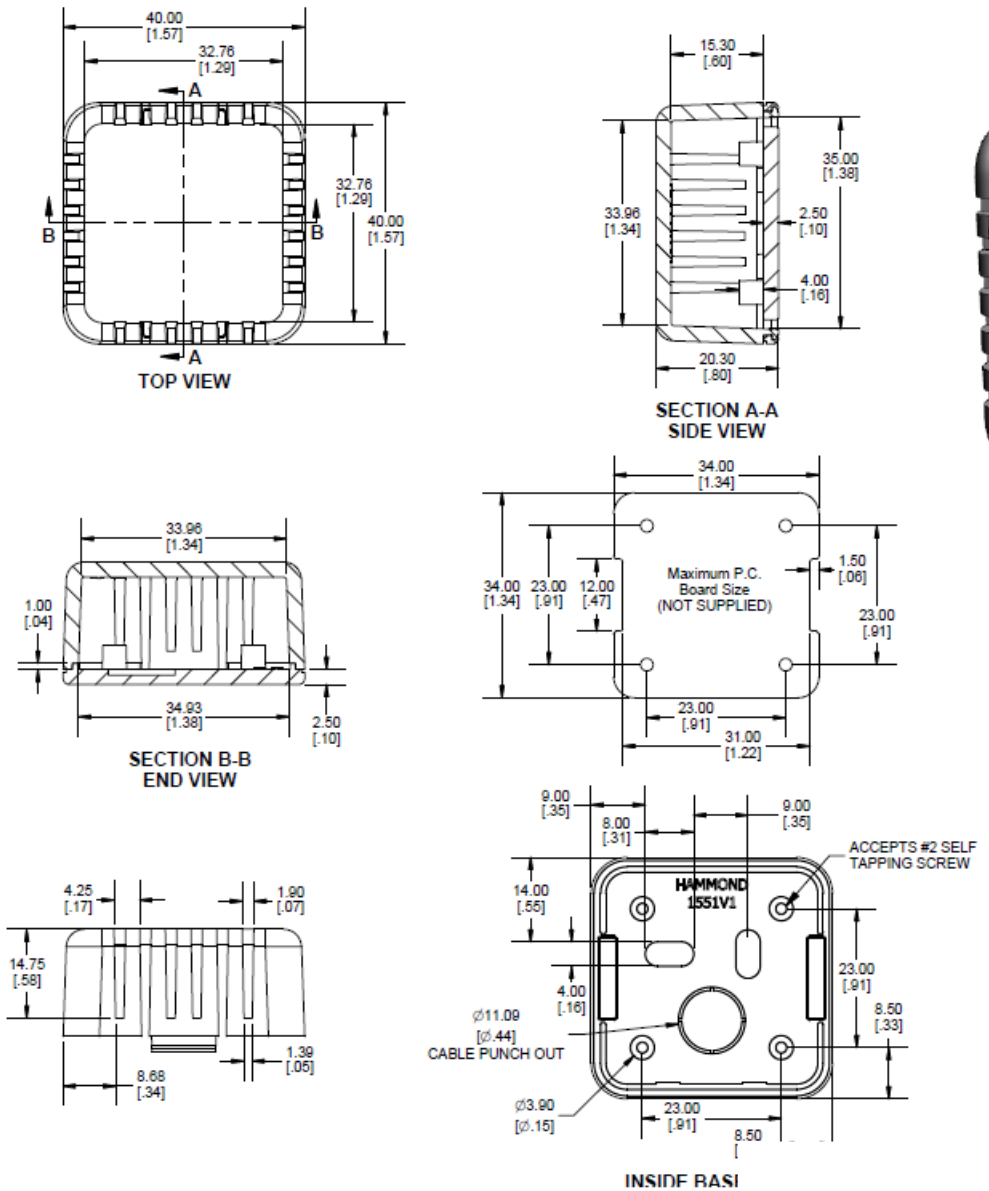

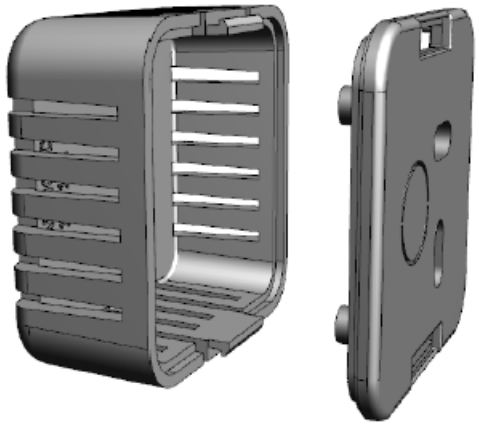

SimplControls

www.simplglobal.com

833-697-4675